इंटरनेट मानक

Disclosure to Promote the Right To Information

Whereas the Parliament of India has set out to provide a practical regime of right to information for citizens to secure access to information under the control of public authorities, in order to promote transparency and accountability in the working of every public authority, and whereas the attached publication of the Bureau of Indian Standards is of particular interest to the public, particularly disadvantaged communities and those engaged in the pursuit of education and knowledge, the attached public safety standard is made available to promote the timely dissemination of this information in an accurate manner to the public.

"जानने का अधिकार, जीने का अधिकार"
Mazdoor Kisan Shakti Sangathan
"The Right to Information, The Right to Live"

"पुराने को छोड नये के तरफ"
Jawaharlal Nehru
"Step Out From the Old to the New"

IS 11843 (1986): Jig Foot Nuts [PGD 2: Machine Tool Elements and Holding Devices]

"ज्ञान से एक नये भारत का निर्माण"
Satyanarayan Gangaram Pitroda
"Invent a New India Using Knowledge"

Act Number 22 of 2005
The Indian Parliament
RIGHT TO INFORMATION

Made Available By
Public.Resource.Org

"ज्ञान एक ऐसा खजाना है जो कभी चुराया नहीं जा सकता है"
Bhartṛhari—Nītiśatakam
"Knowledge is such a treasure which cannot be stolen"

BLANK PAGE

BRUTUM FULMEN

IGNORANTIA JURIS NON EXCUSAT

PROTECTED BY COPYRIGHT

*Indian Standard*

( Reaffirmed 2001 )

# SPECIFICATION FOR JIG FOOT NUTS

[ Ref : Doc : EDC 11 (4320) ]

Machine Tools, Machine Tool Elements and Wood Working Machines Sectional Committee, EDC 11; Jigs, Fixtures and Tooling Elements Subcommittee, EDC 11 : 9

**1. Scope** — Covers dimensions and other requirements for jig foot nuts used with jig foot bolts according to IS : 11831-1986 'Specification for jig foot bolts'.

**2. Dimensions**

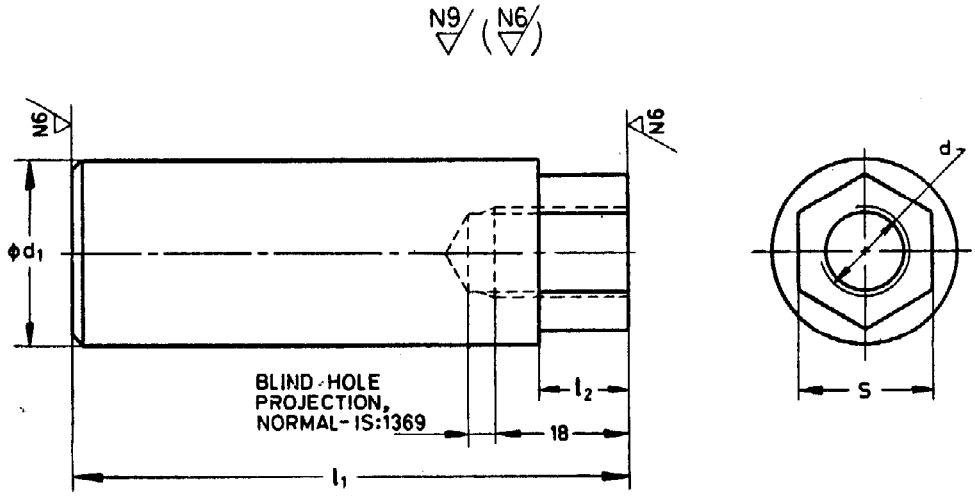


All dimensions in millimetres.

| $d$ | $d_1$ | $l_1$ h11 | | | | $l_2$ | $S$ h14 |
|---|---|---|---|---|---|---|---|
| M10 | 20 | 25 | 50 | — | — | 12 | 16 |
| M12 | 25 | 25 | 50 | 75 | 100 | 12 | 18 |

**Note** — Dimensional deviations for untoleranced dimensions: Medium class according to IS : 2102 ( Part 1 )-1980 'General tolerances for dimensions and form and position: Part 1 General tolerances for linear and angular dimensions ( *second revision* )'.

**3. Threads** — Shall be 6H class as per IS : 4218 'ISO metric screw threads'.

**4. Material** — Steel having tensile strength of 370 MPa, *Min*.

**4.1** The chamfered face of diameter $d_1$, if agreed to between the manufacturer and the user, shall be hardened to 550 *HV, Min*.

**5. Designation** — A jig foot nut having $d_1$ = 25 mm and $l_1$ = 50 mm shall be designated as:

Jig foot nut 25 × 50 IS : 11843

**6. Finish** — The jig foot nuts shall be free from cracks, burrs, pits and other defects.

**7. Preservation and Packing**

**7.1** A suitable anti-corrosive surface treatment shall be given to jig foot nuts.

**7.2** Jig Foot nuts shall be packed in suitable cartons so as to prevent damage during transit.

**8. Marking** — The cartons containing the jig foot nuts shall be marked with designation and manufacturer's name or trade-mark.

**8.1** *Certification Marking* — Details available with Bureau of Indian Standards.

Adopted 3 September 1986 | © August 1987, BIS | 

( Reaffirmed 2001 )

BUREAU OF INDIAN STANDARDS
MANAK BHAVAN, 9 BAHADUR SHAH ZAFAR MARG
NEW DELHI 110002

## EXPLANATORY NOTE

In preparation of this standard, assistance has been derived from BS : 5078-1974 'Specification for jig and fixture components: Table 42 jig foot nuts, steel' issued by the British Standards Institution ( BSI ).



Printed at Delhi Printers, Delhi, India